Sample Name: **Poly( methyl methacrylate-b-Sodium acrylate)**

## Sample #: **P8346- MMAANa**

**Structure:**

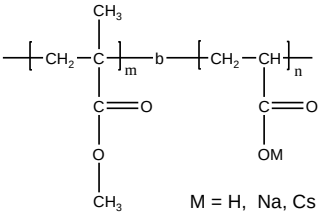


**Composition:**

| Mn x $10^3$ PMMA-ANa | PDI |
|---|---|
| 7.0-b-12.5 | 1.12 |

**Synthesis Procedure: Poly(**-methyl methacrylate-b-acrylic acid sodium salt) is prepared by living anionic polymerization with sequence addition of methyl methacrylate followed by tert.buyl acrylate or vice versa and hydrolysis of the t-butyl group. The scheme of the reaction is illustrated below:

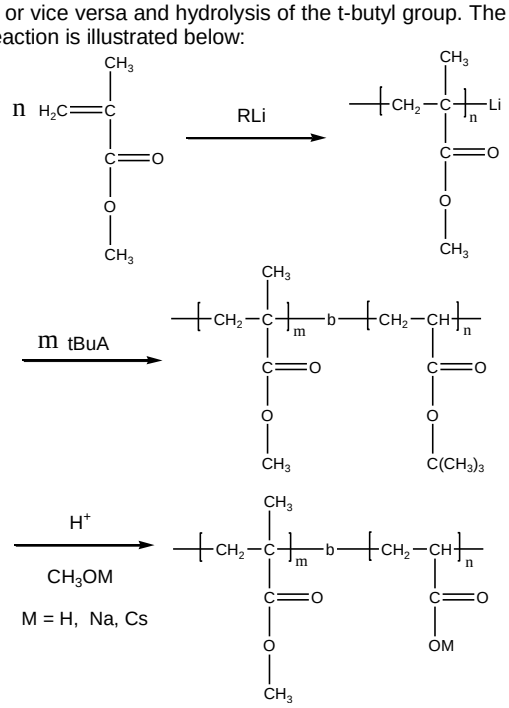


**Characterization:**
An aliquot of the anionic poly(t-butyl acrylic acid) block was terminated before addition of methyl methacrylate and analyzed by size exclusion chromatography (SEC) to obtain the molecular weight and polydispersity index (PDI). The final block copolymer composition was calculated from $^1$H-NMR spectroscopy by comparing the peak area of the t-butyl methacrylate protons at 1.43 ppm with the peak area of the methyl methacrylate protons at 3.6 ppm. Copolymer PDI is determined by SEC.

**Solubility:**
Poly(acrylic acid-b-methyl methacrylate) is soluble in THF and its salt can be solubilize in DMF and in water depending on the compositions.

## EC of the block copolymer:

**P8346-MMAtBuA**
**Precursor for P8346-MMAAANa**

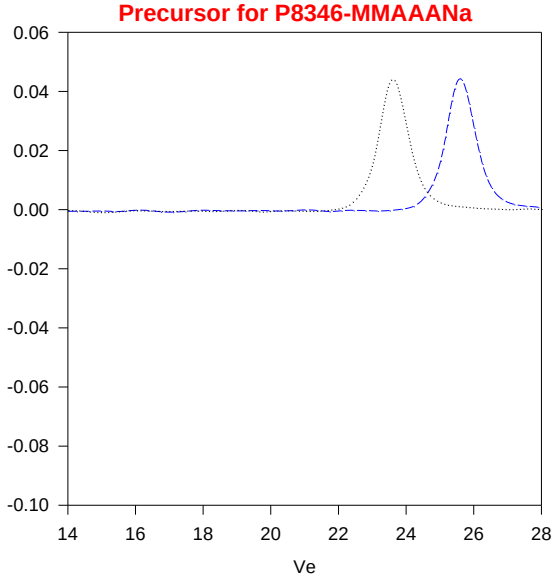


Size Exclusion Chromatography :

Poly methylmethacrylate, $M_n$ =7000 Mw: 7500 $M_w/M_n$=1.08
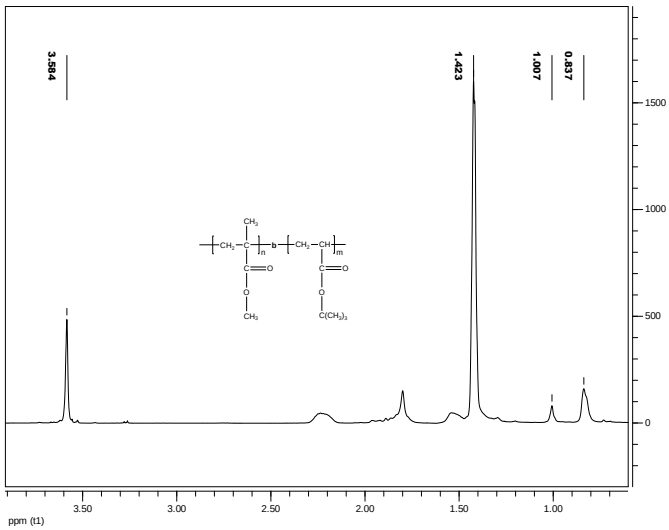
Block Copolymer PMMA(7000)-tBuA(17000), $M_w/M_n$=1.12
after Hyrolysis of tert.butyl ester: PMMA-b-AA:Mn: 7000-b-9500
After Neutralization of acid with NaOH: PMMA-b-PANa : 7000-b-12500
Mw/Mn 1.12